1 meter

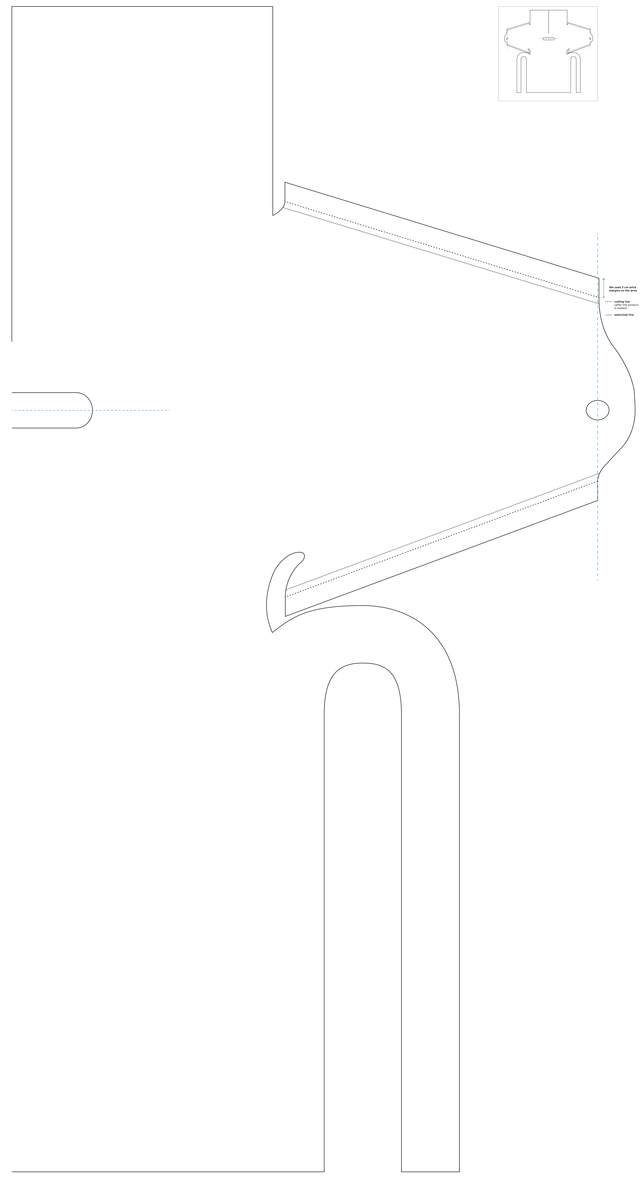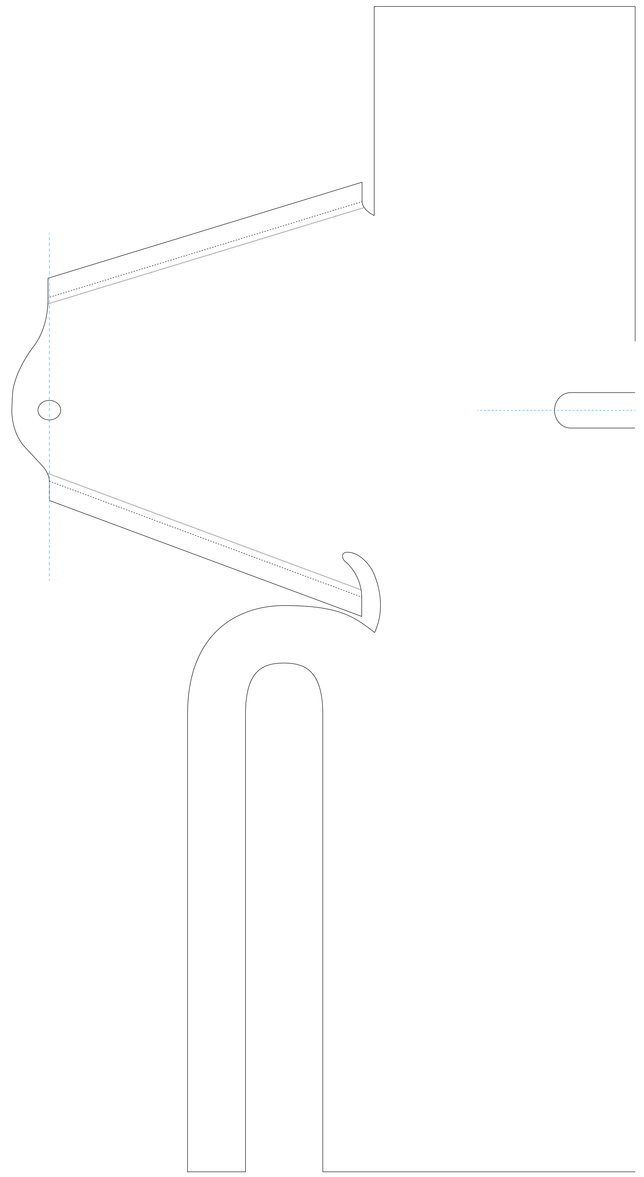
the wood 3 cm extra
needed on the arm
cutting line
(remove product
in process)
scored bend line